RoHS compliant
1.25Gb/s 120km DWDM SFP Transceiver
Hot Pluggable, Duplex LC, 100GHz
DWDM DFB & APD, Single-mode, DDM

Features

- Up to 1.25Gb/s Data Links
- Hot-Pluggable
- Duplex LC connector
- Up to 120km on 9/125μm SMF
- DWDM 100GHz ITU Grid C Band Available
- DWDM DFB laser transmitter
- Single +3.3V Power Supply
- Monitoring Interface Compliant with SFF-8472
- Low power dissipation <1W typically
- Operating temperature range: -5°C to 70°C
- RoHS compliant and Lead Free

Application

- Gigabit Ethernet
- 1×Fiber Channel
- DWDM Networks

Ordering Information

PART NUMBER	WAVELENGTH	INPUT/OUTPUT	SIGNAL DETECT	VOLTAGE	TEMPERATURE
CL-SFP-D120-XX	XXXXnm	AC/AC	TTL	3.3V/5V	-5°C to 70 °C
CL-SFP-D120-XX	XXXXnm	AC/AC	TTL	3.3V/5V	-40°C to 85 °C

Description

Carelink's CL-SFP-D120-XX Small Form Factor Pluggable (SFP) transceivers are compatible with the Small Form Factor Pluggable Multi-Sourcing Agreement (MSA) and SFF-8472. The transceiver consists of two sections: The transmitter section incorporates a cooled DWDM DFB laser, And the receiver section consists of a APD photodiode integrated with a TIA. The module data link up to 120km in 9/125um single mode fiber. It offers a simple and convenient way to interface PCBs to single mode fiber optic cables in Dense Wavelength Division Multiplexing (DWDM) applications. It is a high performance, cost effective module for serial optical data communication applications.

www.carelink.com.hk

Absolute Maximum Ratings

Parameter	Symbol	Min.	Typical	Max.	Unit
Storage Temperature	T_S	-40		+85	°C
Supply Voltage	V_{CC}	-0.5		4	V
Relative Humidity	RH	0		85	%

RecommendedOperating Environment:

Parameter	Symbol	Min.	Typical	Max.	Unit
Case operating Temperature	Tc	-5		+70	°C
Supply Voltage	V_{CC}	3.135		3.465	V
Supply Current	Icc			300	mA
Inrush Current	I_{surge}			Icc+30	mA
Maximum Power	P_{max}			1	W

Electrical Characteristics(T_{OP} = Tc, VCC = 3.135 to 3.465 Volts)

Parameter	Symbol	Min.	Typical	Max.	Unit	Note
Transmitter Section:						
Input differential impedance	R_{in}	90	100	110		
Single ended data input swing	$V_{in\ PP}$	250		1200	mVp-p	
Transmit Disable Voltage	V_D	V_{cc} – 1.3		V_{cc}	V	2
Transmit Enable Voltage	V_{EN}	V_{ee}		Vee+ 0.8	V	
Transmit Disable Assert Time	$T_{dessert}$			10	us	
Receiver Section:						
Single ended data output swing	V_{out},pp	300		800	mv	3
Data output rise time	t_r			260	ps	4
Data output fall time	t_f			260	ps	4
LOS Fault	$V_{losfault}$	Vcc – 0.5		V_{CC_host}	V	5
LOS Normal	$V_{los\ norm}$	V_{ee}		V_{ee}+0.5	V	5
Power Supply Rejection	PSR	100			mVpp	6

Note:
1. AC coupled.
2. Or open circuit.

www.carelink.com.hk

3. Into 100 ohm differential termination.
4. 20 – 80 %
5. LOS is LVTTL. Logic 0 indicates normal operation; logic 1 indicates no signal detected.
6. All transceiver specifications are compliant with a power supply sinusoidal modulation of 20 Hz to 1.5MHz up to specified value applied through the power supply filtering network shown on page 23 of the Small Form-factor Pluggable (SFP) Transceiver Multi-Source Agreement (MSA), September 14, 2000.

Optical Characteristics(T_{OP} = Tc, VCC = 3.135 to 3.465 Volts)

Parameter	Symbol	Min.	Typica	Max.	Unit	Note
Transmitter Section:						
Optical Wavelength-End Of Life	λ	X-100	X	X+100	pm	
Optical Wavelength-Beginning Of	λ	X-25	X	X+25	pm	
Spectral Width	σ			1	nm	
Side Mode Suppression Ratio	SMSR	30			dB	
Optical Output Power	P_{out}	0		+5	dBm	1
Optical Rise/Fall Time	t_r / t_f			260	ps	2
Extinction Ratio	ER	9			dB	
Generated Jitter (peak to peak)	J_{TX}p-p			0.07	UI	3
Generated Jitter (rms)	J_{TX}rms			0.007	UI	3
Eye Mask for Optical Output	Compliant with IEEE802.3z(class 1 laser					
Receiver Section:						
Optical Input Wavelength	λ_c	1480		1580	nm	
Receiver Overload	P_{ol}	-8			dBm	4
RX Sensitivity	Sen			-32	dBm	4
RX_LOS Assert	LOS $_A$	-45			dBm	
RX_LOS De-assert	LOS D			-33	dBm	
RX_LOS Hysteresis	LOS H	0.5			dB	
General Specifications:						
Data Rate	BR		1.25		Gb/s	
Bit Error Rate	BER			10^{-12}		
Max. Supported Link Length on 9/125um SMF@1.25Gb/s	L_{MAX}		120		km	
Total System Budget	LB	32			dB	

Note
1. The optical power is launched into SMF.
2. 20-80%.
3. Jitter measurements taken using Agilent OMNIBERT 718 in accordance with GR-253.
4. Measured with PRBS 2_7 -1at 10_{-12} BER

Pin Assignment:

www.carelink.com.hk

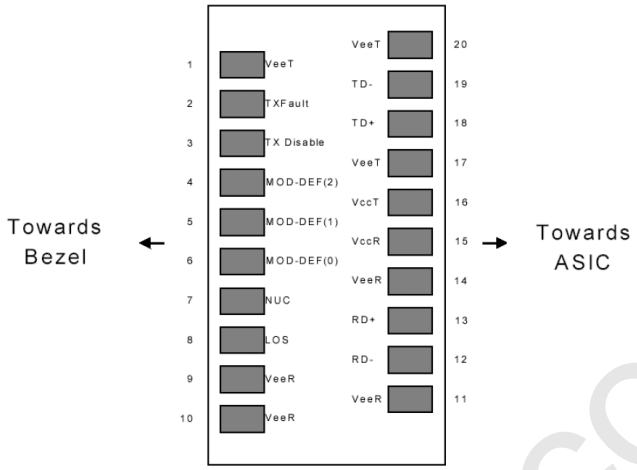

Diagram of Host Board Connector Block Pin Numbers and Names

Pin Function Definitions

Pin	Name	Function	Plug	Note
1	V_{eeT}	Transmitter Ground	**1**	**1**
2	TX Fault	Transmitter Fault	**3**	
3	TX Disable	Transmitter Disable	**3**	2
4	MOD-	Module Definition	**2**	3
5	MOD-	Module Definition 1	**3**	3
6	MOD-	Module Definition 0	**3**	3
7	Rate Select	Not Connected	**3**	**4**
8	LOS	Loss of Signal	**3**	5
9	V_{eeR}	Receiver Ground	**1**	**1**
10	V_{eeR}	Receiver Ground	**1**	**1**
11	VeeR	Receiver Ground		**1**
12	RD-	Inv. Received Data Out	**3**	**6**
13	RD+	Received Data Out	**3**	**6**
14	VeeR	Receiver Ground	**3**	**1**
15	VccR	Receiver Power	**2**	**1**
16	VccT	Transmitter Power	**2**	
17	VeeT	Transmitter Ground	**1**	
18	TD+	Transmit Data In	**3**	**6**
19	TD-	Inv. Transmit In	**3**	**6**
20	VeeT	Transmitter Ground	**1**	

Notes:
1. Circuit ground is internally isolated from chassis ground.
2. Laser output disabled on TDIS >2.0V or open, enabled on TDIS <0.8V.

www.carelink.com.hk

3. Should be pulled up with 4.7k - 10 kohms on host board to a voltage between 2.0V and 3.6V. MOD_DEF(0) pulls line low to indicate module is plugged in.
4. Rate select is not used
5. LOS is open collector output. Should be pulled up with 4.7k – 10 kohms on host board to a voltage between 2.0V and 3.6V. Logic 0 indicates normal operation; logic 1 indicates loss of signal.
6. AC Coupled

SFP Module EEPROM Information and Management

The SFP modules implement the 2-wire serial communication protocol as defined in the SFP -8472. The serial ID information of the SFP modules and Digital Diagnostic Monitor parameters can be accessed through the I2C interface at address A0h and A2h.
The memory is mapped in Table 1.
Detailed ID information (A0h) is listed in Table 2.
And the DDM specification at address A2h.
For more details of the memory map and byte definitions, please refer to the SFF-8472, "Digital Diagnostic Monitoring Interface for Optical Transceivers". The DDM parameters have been internally calibrated.

Table 1. Digital Diagnostic Memory Map (Specific Data Field Descriptions)

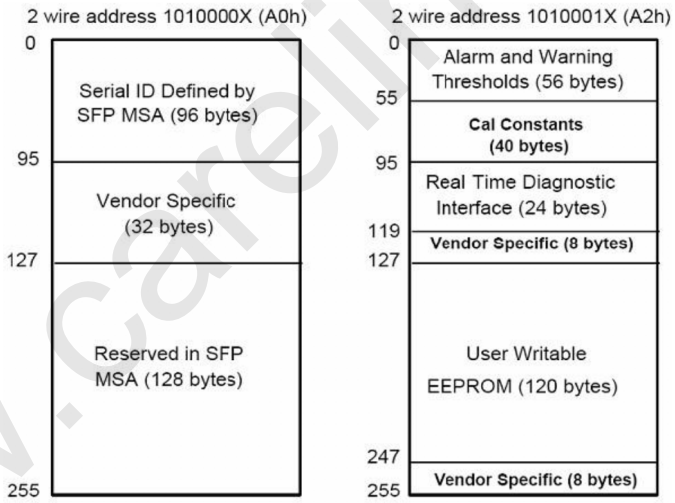

Table 2 - EEPROM Serial ID Memory Contents (**A0h**)

Data Addres	Lengt h	Name of	Description and Contents
Base ID Fields			
0	1	Identifier	Type of Serial transceiver (03h=SFP)
1	1	Reserved	Extended identifier of type serial transceiver (04h)

www.carelink.com.hk

2	1	Connector	Code of optical connector type (07=LC)
3-10	8	Transceiver	
11	1	Encoding	NRZ(03h)
12	1	BR, Nominal	Nominal baud rate, unit of 100Mbps
13-14	2	Reserved	(0000h)
15	1	Length(9um)	Link length supported for 9/125um fiber, units of 100m
16	1	Length(50um)	Link length supported for 50/125um fiber, units of 10m
17	1	Length(62.5u	Link length supported for 62.5/125um fiber, units of
18	1	Length(Copper	Link length supported for copper, units of meters
19	1	Reserved	
20-35	16	Vendor Name	SFP vendor name: CARELINK
36	1	Reserved	
37-39	3	Vendor OUI	SFP transceiver vendor OUI ID
40-55	16	Vendor PN	Part Number: "CL-SFP-D120-XX" (ASCII)
56-59	4	Vendor rev	Revision level for part number
60-62	3	Reserved	
63	1	CCID	Least significant byte of sum of data in address 0-62
Extended ID Fields			
64-65	2	Option	Indicates which optical SFP signals are implemented (001Ah = LOS, TX_FAULT, TX_DISABLE all
66	1	BR, max	Upper bit rate margin, units of %
67	1	BR, min	Lower bit rate margin, units of %
68-83	16	Vendor SN	Serial number (ASCII)
84-91	8	Date code	CARELINK's Manufacturing date code
92-94	3	Reserved	
95	1	CCEX	Check code for the extended ID Fields (addresses 64 to
Vendor Specific ID Fields			
96-127	32	Readable	CARELINK specific date, read only
128-255	128	Reserved	Reserved for SFF-8079

Digital Diagnostic Monitor Characteristics

Data Address	Parameter	Accuracy	Unit
96-97	Transceiver Internal Temperature	±3.0	°C
98-99	VCC3 Internal Supply Voltage	±3.0	%
100-101	Laser Bias Current	±10	%
102-103	Tx Output Power	±3.0	dBm
104-105	Rx Input Power	±3.0	dBm

www.carelink.com.hk

Regulatory Compliance

The CL-SFP-D120-XX complies with international Electromagnetic Compatibility (EMC) and international safety requirements and standards (see details in Table following).

Electrostatic Discharge (ESD) to the Electrical Pins	MIL-STD-883E Method 3015.7	Class 1(>1000 V)
Electrostatic Discharge (ESD)to the Duplex LC Receptacle	IEC 61000-4-2 GR-1089-CORE	Compatible with standards
Electromagnetic Interference (EMI)	FCC Part 15 Class B EN55022 Class B (CISPR 22B) VCCI Class B	Compatible with standards
Laser Eye Safety	FDA 21CFR 1040.10 and 1040.11 EN60950, EN (IEC) 60825-1,2	Compatible with Class 1 laser product.

Recommended Circuit:

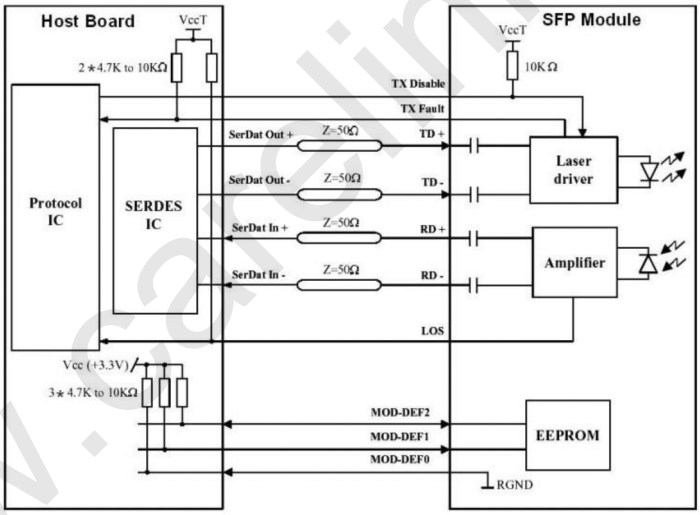

SFP Host Recommended Circuit

Mechanical Dimensions:

www.carelink.com.hk

RoHS compliant
1.25Gb/s 120km DWDM SFP Transceiver
Hot Pluggable, Duplex LC, 100GHz
DWDM DFB & APD, Single-mode, DDM

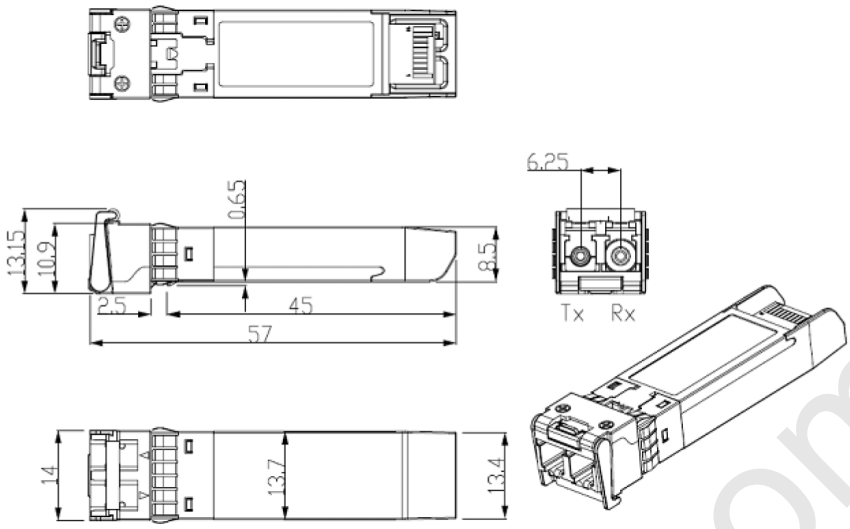

Mechanical Drawing

Part No.	Central Wavelength(nm)	Frequency (THZ)
CL-SFP-D120-61	1528.7	196.1
CL-SFP-D120-60	1529.5	196.0
CL-SFP-D120-59	1530.3	195.9
CL-SFP-D120-58	1531.1	195.8
CL-SFP-D120-57	1531.9	195.7
CL-SFP-D120-56	1532.6	195.6
CL-SFP-D120-55	1533.4	195.5
CL-SFP-D120-54	1534.2	195.4
CL-SFP-D120-53	1535.0	195.3
CL-SFP-D120-52	1535.8	195.2
CL-SFP-D120-51	1536.6	195.1
CL-SFP-D120-50	1537.4	195.0
CL-SFP-D120-49	1538.1	194.9
CL-SFP-D120-48	1538.9	194.8
CL-SFP-D120-47	1539.7	194.7
CL-SFP-D120-46	1540.5	194.6
CL-SFP-D120-45	1541.3	194.5
CL-SFP-D120-44	1542.1	194.4
CL-SFP-D120-43	1542.9	194.3
CL-SFP-D120-42	1543.7	194.2
CL-SFP-D120-41	1544.5	194.1
CL-SFP-D120-40	1545.3	194.0
CL-SFP-D120-39	1546.1	193.9
CL-SFP-D120-38	1546.9	193.8

www.carelink.com.hk

CL-SFP-D120-37	1547.7	193.7
CL-SFP-D120-36	1548.5	193.6
CL-SFP-D120-35	1549.3	193.5
CL-SFP-D120-34	1550.1	193.4
CL-SFP-D120-33	1550.9	193.3
CL-SFP-D120-32	1551.7	193.2
CL-SFP-D120-31	1552.5	193.1
CL-SFP-D120-30	1553.3	193.0
CL-SFP-D120-29	1554.1	192.9
CL-SFP-D120-28	1554.9	192.8
CL-SFP-D120-27	1555.7	192.7
CL-SFP-D120-26	1556.5	192.6
CL-SFP-D120-25	1557.3	192.5
CL-SFP-D120-24	1558.1	192.4
CL-SFP-D120-23	1558.9	192.3
CL-SFP-D120-22	1559.7	192.2
CL-SFP-D120-21	1560.6	192.1
CL-SFP-D120-19	1562.2	191.9
CL-SFP-D120-18	1563.0	191.8
CL-SFP-D120-17	1563.8	191.7

Notice:

Carelink reserves the right to make changes or discontinue any optical link product or service identified in this publication, without notice, in order to improve design and/or performance.
Applications that are described herein for any of the optical link products are for illustrative purposes only. Carelink makes no representation or warranty that such applications will be suitable for the specified use without further testing or modification.

www.carelink.com.hk